ZP06 Industrial Enclosure

IP65

The ZP enclosure from Abtech is a durable and lightweight solution for industrial applications. Made from high-impact polycarbonate or ABS, it offers excellent protection against harsh environments while maintaining a sleek design.

- Ambient temperature range up to -40°C to +120°C
- Weather Resistant, up to IP65 Rated
- Versatile Applications – Ideal for electrical and instrumentation systems



Enclosure Information

Product Reference	Width (mm)	Height (mm)	Depth (mm)	Weight (g)
EZP06	120	80	85	225
EZP06ABS	120	80	85	205
EZP06CLEAR	120	80	85	225
EZP06ABSCLEAR	120	80	85	205

CLEAR – *Indicates enclosure is the clear lid variant.*

Standard Specifications

Enclosure Material	Polycarbonate* or ABS (RAL7035).
Ingress Protection	IP65 to EN60529
Service Temperature	Polycarbonate: -40°C to +120°C ABS: -40°C to +65°C

**UL94-V0 Material available on request*

Options

Clear Lid Variant		
Lid Material	Polycarbonate or ABS (clear)	
Ingress Protection	IP65 to EN60529	
Service Temperature	Polycarbonate: -65^{0}C to +130^{0}C ABS: -40^{0}C to +65^{0}C	

Accessories

Mounting Plate: Pertinax
Mounting Feet
External Hinges

Product design and specifications are subject to change without notice; please check the website for latest specifications

Dimensions

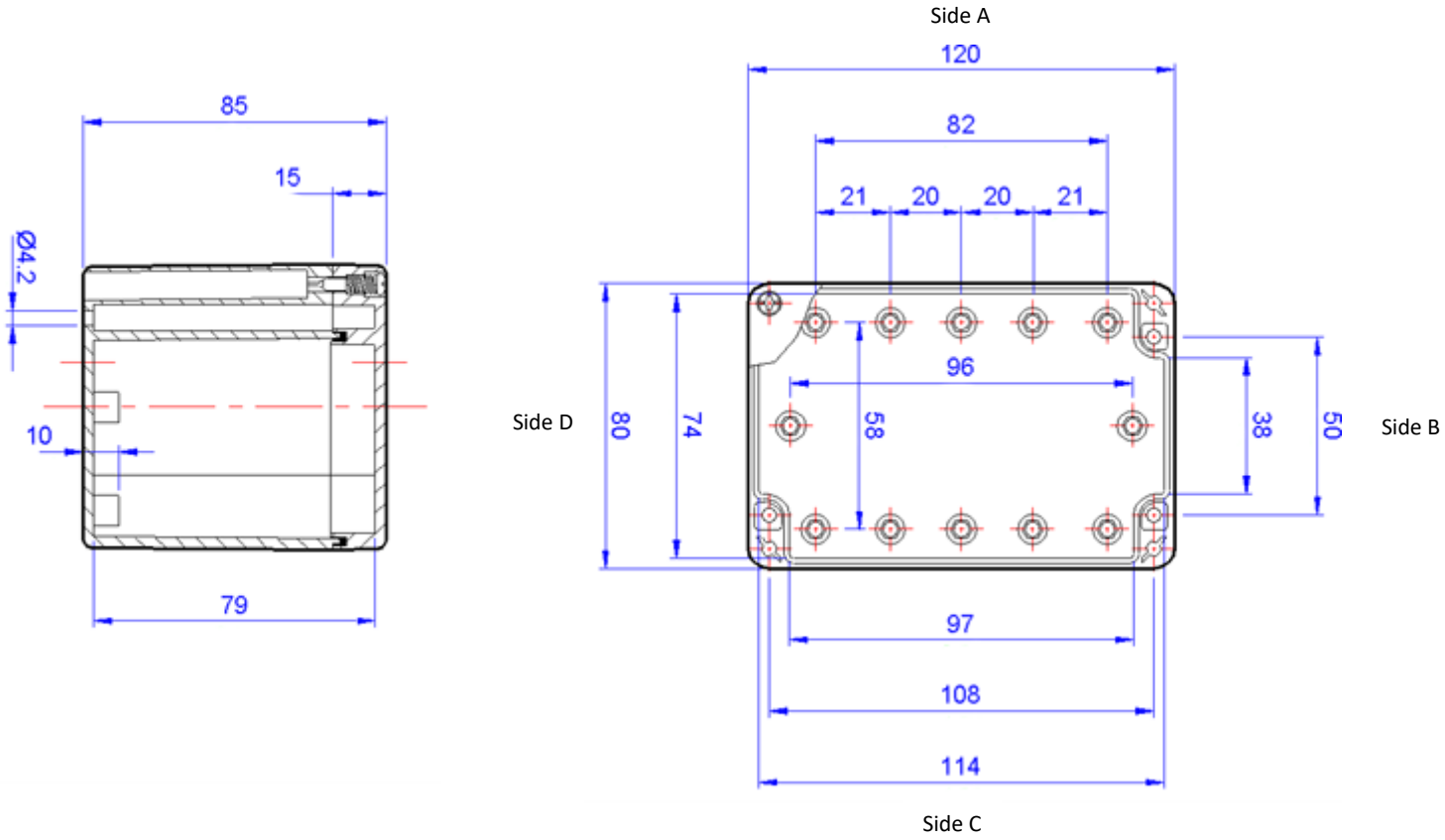

All dimensions are in mm.